PRODUCT SPECIFICATION

BL1204

Sydney Head Office Phone: (02) 9542 4991
Sydney Head Office Fax: (02) 9542 4662
Brisbane 0400 494 368
Melbourne 0409 578 885
Auckland: 021 964 600
Email: sales@kethy.com.au

Material:	Die-cast Zinc with Crystal Glass insert
Article Number:	BL1214/reference **C**/-Colour
Sizes:	

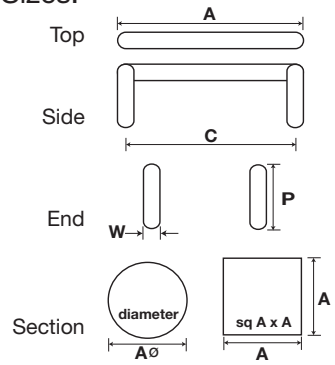

A	C	P	W
48	0	31	48
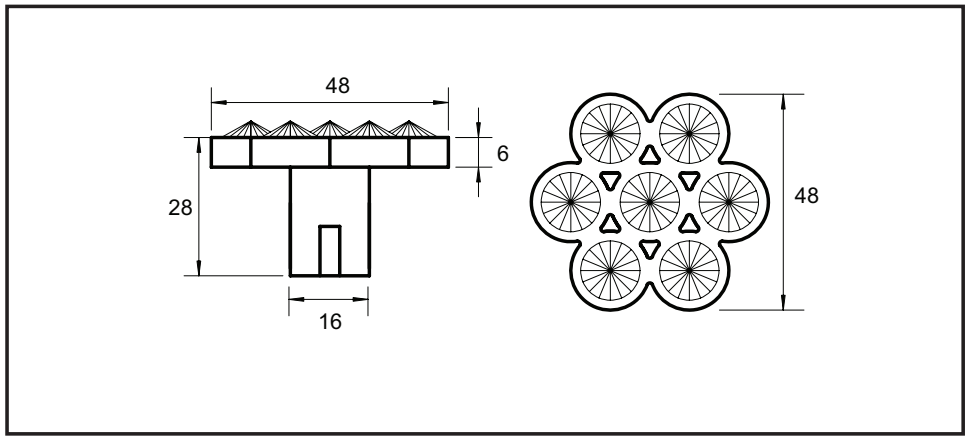
Colours available:	Polished Chrome (PC) Satin Chrome (SAT)