www.kethy.com

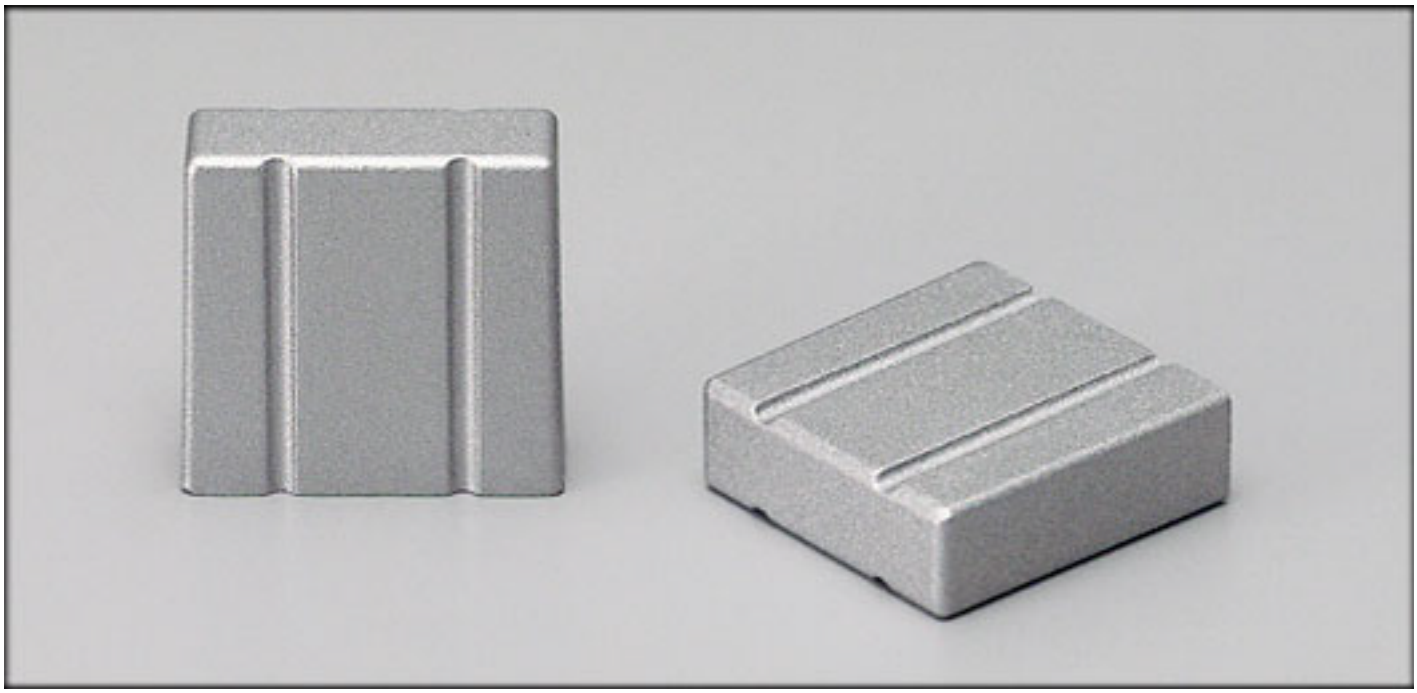

B222 Die-Cast Zinc Borg Knob
Sizes: 16mm C to C

Colour: Alu-colour

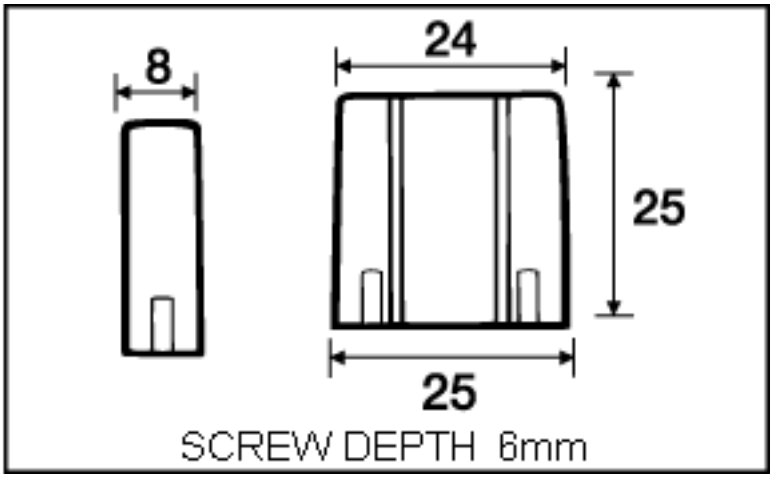

Kethy Australia
Architectural Accessories
Greg Steele Trading Pty Ltd
Unit 15/ 29-33 Waratah Street
(PO Box 3292)
Kirrawee NSW 2232
Australia

Phone: (02) 9542 4991
Fax: (02) 9542 4662
Email: sales@kethy.com.au
Melbourne and Brisbane
Phone/Fax: 1300 769 662
Mobile: Brisbane 0400 494 368
Mobile: Melbourne 0409 578 885